Adaptive Multi-pass Decoder for Neural Machine Translation

EMNLP 2018

http://aclweb.org/anthology/D18-1048

Neural Machine Translation(NMT)

- The encoder-decoder are widely used in neural machine translation
  - the encoder transforms the source sentence into continuous vectors
  - the decoder generates the target sentence according to the vectors
  - the alternatives of the encoder/decoder can be RNN/CNN/SAN

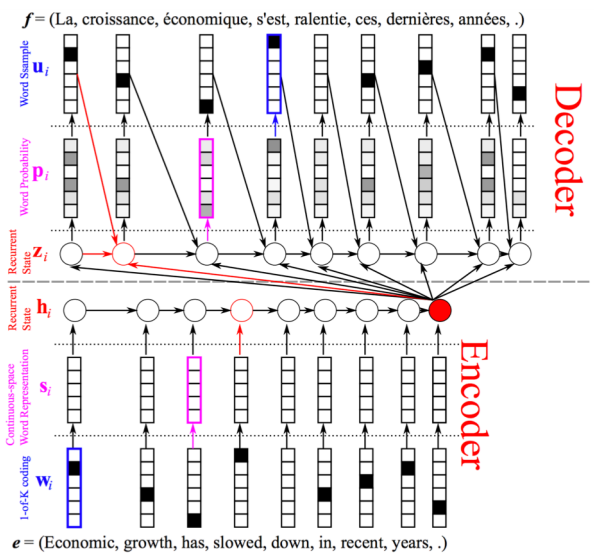

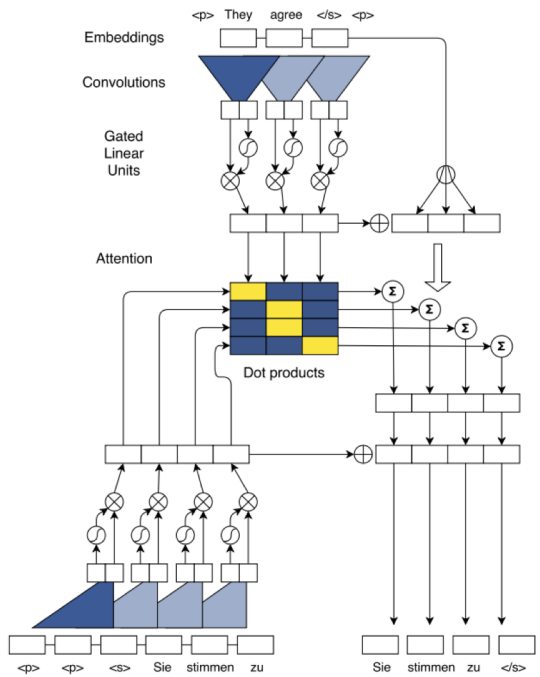

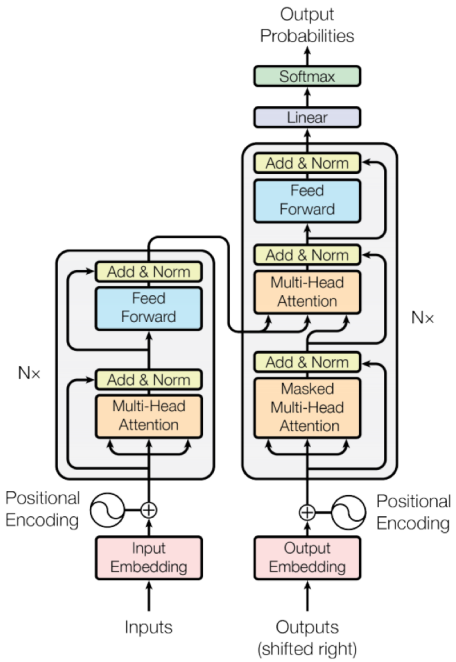

Motivation

- Traditional attention-based NMT adopts one-pass decoding to generate the target sentence
- Recently, the polishing mechanism-based approaches demonstrate their effectiveness
  - these approaches first create a complete draft using the conventional models
  - and then polish this draft based on the global understanding of the whole draft
- Divided into two categories
  - **post-editing** - > a source sentence *e* is first translated to *f*, and then *f* is refined by another model
  - with respect to post-editing, the generating and refining are two separate processes

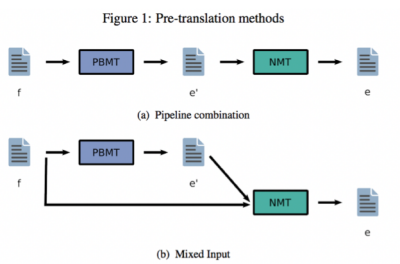

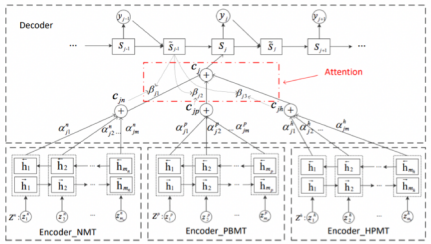

  - **end-to-end approaches** -> most relevant to our work

Related Work

- Deliberation Networks (Xia et al. NIPS 2017)
  - consist of two decoders: a first-pass decoder generates a draft, which is taken as input of second-pass decoder to obtain a better translation
  - The second-pass decoder has the potential to generate a better sequence by looking into future words in the raw sentence
- ABDNMT (Zhang et al. AAAI 2018)
  - adopt a backward decoder to capture the right-to-left target-side contexts
  - assist the second-pass forward decoder to obtain a better translation

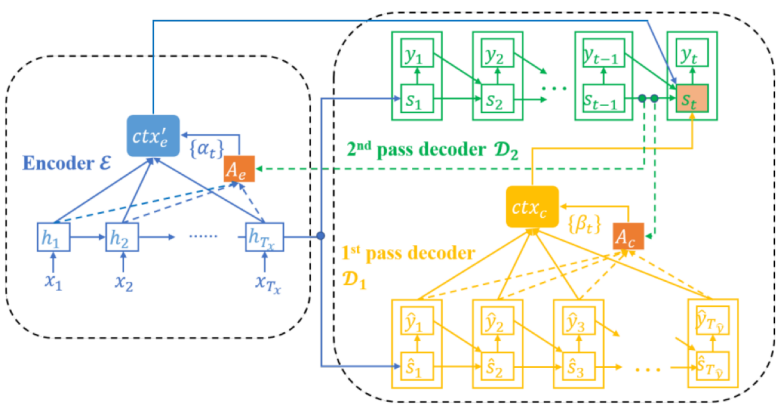

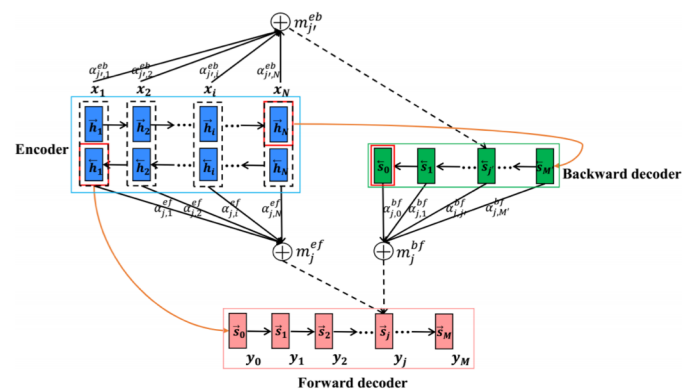

- **the idea of multi-pass decoding is not well explored**

Adaptive Multi-pass Decoder

- Consist of three components -> encoder, multi-pass decoder and policy network
  - **multi-pass decoder** -> polish the generated translation with decoding over and over
  - **policy network** -> choose the appropriate decoding depth (the number of decoding passes)

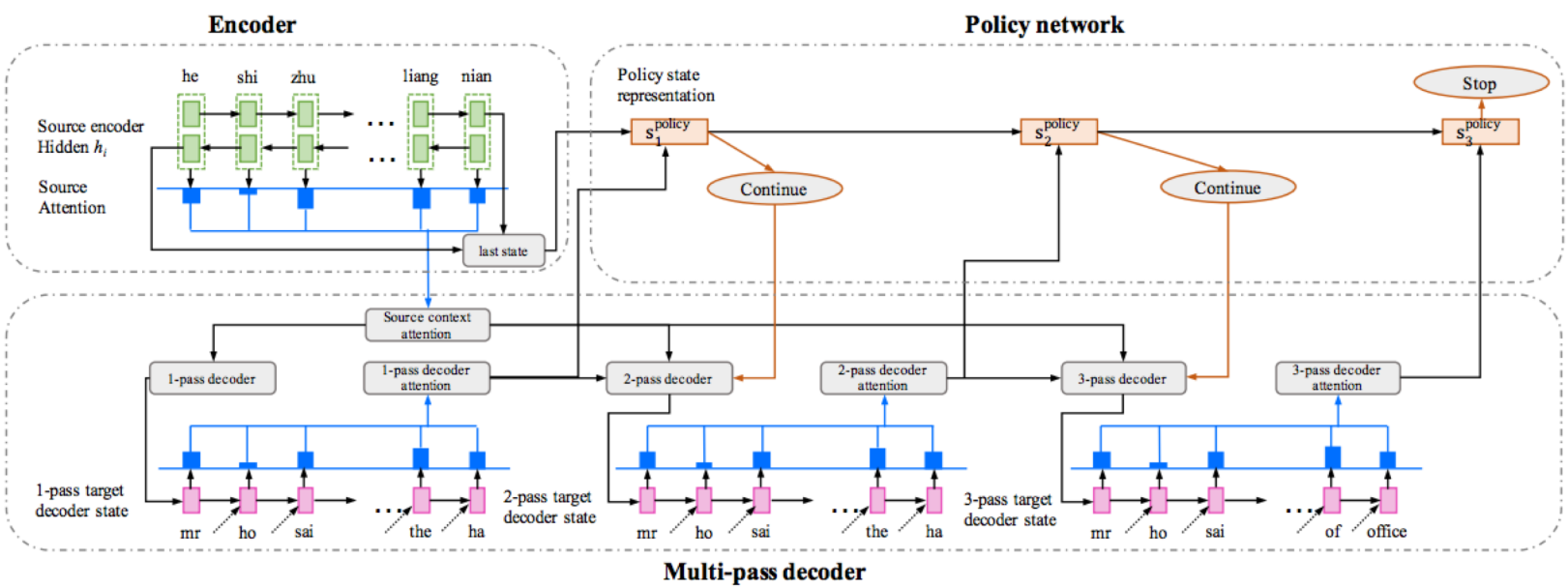

Multi-pass Decoder

- Similar to the conventional decoder, the multi-pass decoder leverages a attention model to capture the source context from the source sentence
- Towards considering the context information from generated translation, another attention model is utilized to achieve this target
- The attended hidden states are derived from the inference using the previous decoder

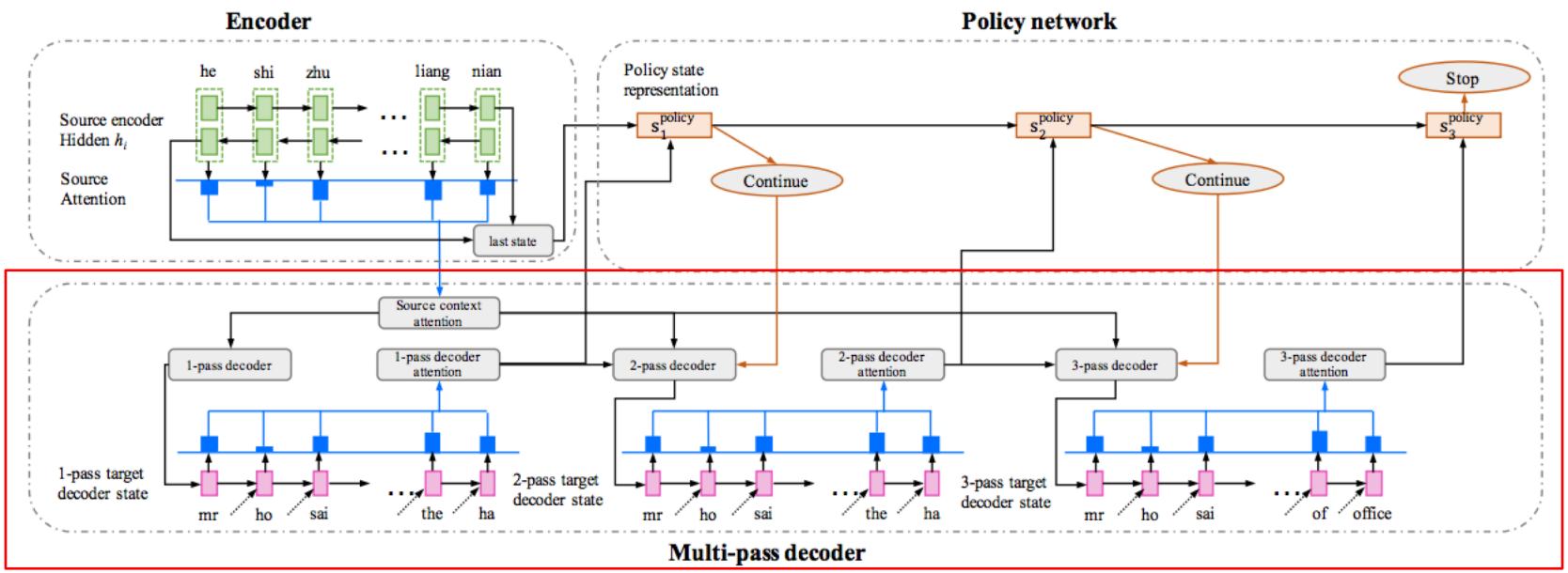

Policy Network

- The policy network determines to continue decoding or halt -> two actions
- The hidden states of policy network are computed with RNN to model the difference between the consecutive decoding
- We use attention model to capture useful information and take the output as input of RNN
- We use REINFORCE algorithm to train the policy network, and take BLEU as the reward

$$\mathbf{s}_l^{policy} = f^{policy}(\mathbf{s}_{l-1}^{policy}, m_l)$$

$$\pi(\mathbf{a}_l|\mathbf{s}_l^{policy};\theta_p) = softmax(W_p\mathbf{s}_l^{policy} + b_p)$$

$$J^{policy}(\theta_p) = \mathbb{E}_{\pi(\mathbf{a}|\mathbf{s}^{policy};\theta_p)} r(\hat{\mathbf{y}}^{L(\mathbf{x},\mathbf{y})})$$

$$r(\hat{\mathbf{y}}^{L(\mathbf{x},\mathbf{y})}) = \mathrm{BLEU}(\hat{\mathbf{y}}^{L(\mathbf{x},\mathbf{y})}, \mathbf{y})$$

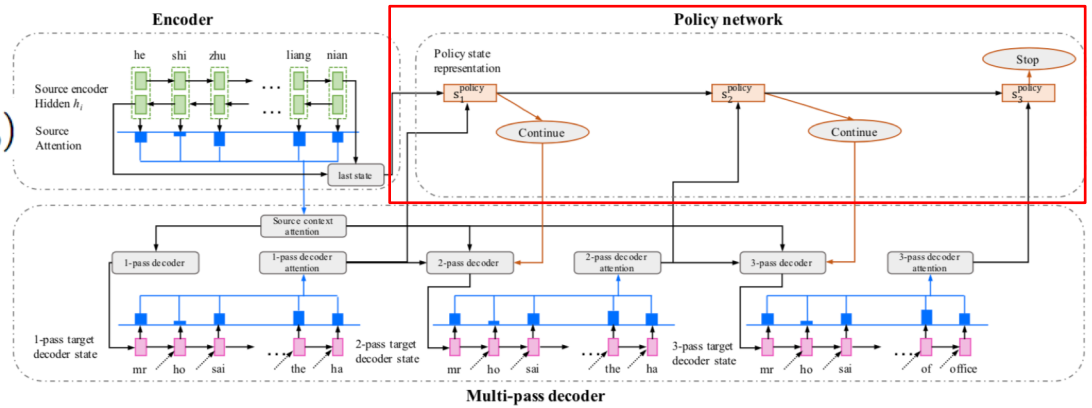

Experiments

- Chinese-English translation task
  - 1.25M sentence pairs from LDC corpora
  - use NIST02 as development dataset and NIST03, NIST04,NIST05,NIST06 and NIST08 as testing datasets
  - take BLEU as evaluation metric

System	#Params	Speed	MT02	MT03	MT04	MT05	MT06	Ave.
Moses	–	–	33.79	30.86	32.71	30.02	30.49	31.02
RNNSearch	83.99M	87	39.68	36.51	40.20	36.87	36.43	37.50
Deliberation Network	125.16M	162	40.98	37.82	40.56	37.67	37.20	38.31
ABDNMT	122.86M	132	41.12	38.01	41.20	38.07	37.59	38.71
2-pass decoder	87.81M	160	41.18	37.76	41.06	38.02	37.41	38.56
3-pass decoder	87.81M	245	41.28	37.99	40.72	37.86	37.63	38.55
4-pass decoder	87.81M	293	41.05	37.86	40.87	38.18	37.57	38.62
5-pass decoder	87.81M	322	40.88	37.70	40.84	38.06	**37.97**	38.64
Adaptive multi-pass decoder	96.01M	180	**41.42**	**38.39**	**41.43**	**38.54**	37.86	**39.05**

- The average decoding depth is **2.12**

Depth	1	2	3	4	5
Ratio(%)	46.57	20.45	13.00	13.60	6.38

Case Study

Source	*xīnhuáshè běijīng 4 yuè 5 rì diàn dàmíngdǐngdǐng dē wēiruǎn gōngsī zǒngcái bǐěr · gàicí rìqián bèi jiānádà yì jiā guǎngbō diàn tái " shuàn le " yì bǎ , zài yúrénjié nàtiān bèi kāi le yīgè dàwángxiào .*
Reference	*xinhua news agency, beijing, april 5 , bill gates , the all - famous microsoft chairman, was duped by a canadian radio station the the other day and fell a victim to a big prank on april fools ' day.*
1st-pass	*xihua news agency report of april 5 th from beijing (by staff reporter UNK UNK) - the president of microsoft 's microsoft corporation , gates , was recently " UNK " by a radio station in canada and was hit by a UNK day on the day of the day .*
2nd-pass	*xinhua news agency, beijing, april 5, a fews days ago, microsoft 's president , microsoft corporation , was " UNK " by a radio station in canada .*
3rd-pass	***xinhua news agency, beijing, april 5 , microsoft 's president bill gates, the president of microsoft , was " UNK " by a radio station in canada in few days ago .***
4th-pass	*xinhua news agency, beijing, april 5 , microsoft 's president bill gates, the president of microsoft , was " UNK " by a radio station in canada in few days ago .*
5th-pass	*xinhua news agency, beijing, april 5 , microsoft 's president bill gates, the president of microsoft , was " UNK " by a radio station in canada in few days ago .*

Conclusion

- We first explore to generate the translation with fixed decoding depth
- Further we leverage policy network to determines continuing decoding or halt and train this network using reinforcement learning
- We demonstrate its effectiveness on Chinese-English translation task

Thanks & QA